3–6260

REV.	BY	DATE	DESCRIPTION	APP'D.

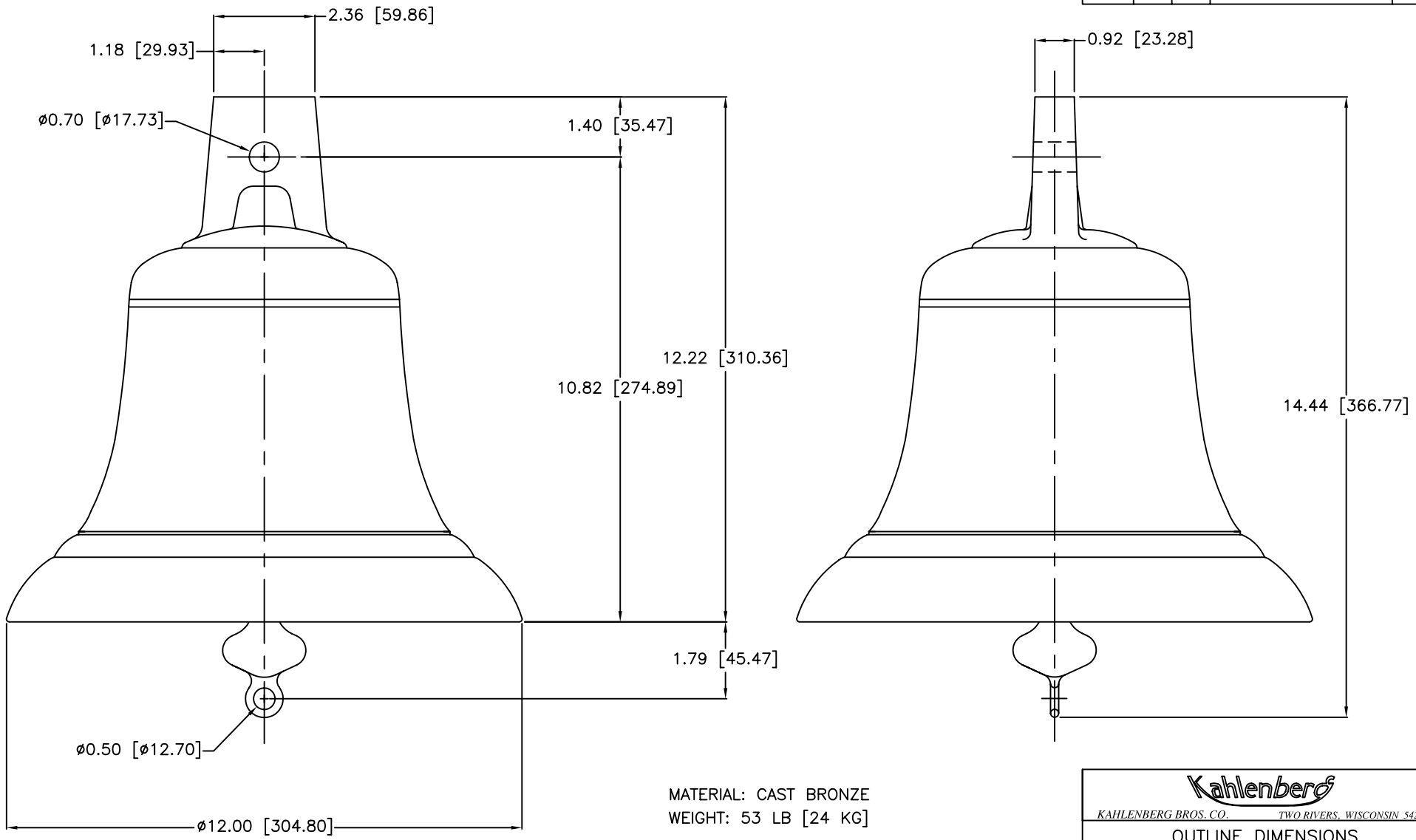

MATERIAL: CAST BRONZE
WEIGHT: 53 LB [24 KG]

Kahlenberg

KAHLENBERG BROS. CO. TWO RIVERS, WISCONSIN 54241

OUTLINE DIMENSIONS
P492–02BE CLASSIC
12" BELL

DR.	DATE	CKD.	SCALE	DRWG. NO.	REV.
ZJN	11/06/03	ZJN	N.T.S.	3–6260	